TE100

Compact Electronic Bagging Scale

Taylor Product's TE 100 includes more features than most large scales. The operator simply sets the weight and hangs the bag. The unit clamps the bag in place, fills, checks the weight, and drops the bag.

Innovative Compact Electronic Scale with Self-Correcting Precision

- 20 lb to 125 lb
- Granulars
- Bulk and Dribble Flow Gate
- Compact Design
- Up to 14 weighments per minute

taylor products
Division of Magnum Systems

A leader in the design and manufacture of packaging automation systems and equipment. Established 1969.

Specifications

TE100

Diagram dimensions are for reference only

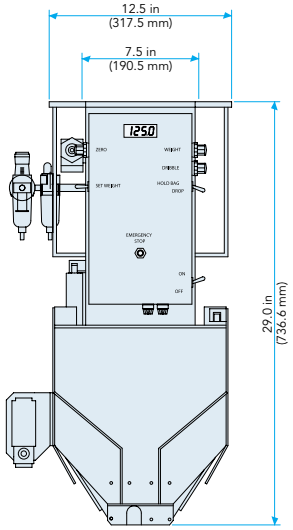

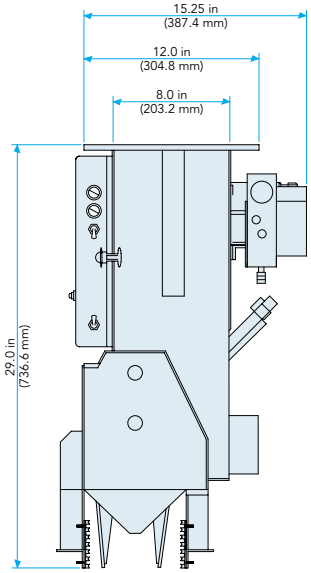

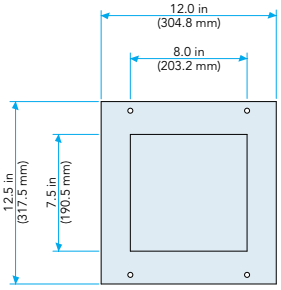

Dimensions	29.00 in x 12.50 in x 15.25 in (736.5 mm x 317.5 mm x 387.4 mm)
Speed	Up to 14 weighments per minute
Accuracy	Up to 0.4%
Weight Range	20 lb to 125 lb (9.07 kg to 56.70 kg)
Scale	Analog, Digital
Construction	Carbon Steel Blasted and Painted
Electrical Requirements	110 Volt, single phase
Air Requirements	80 PSI (5.52 BAR), 2 CFM
Flow System	Baffled Materials Flow System with bulk and dribble flow gate (consistent flow)
Weight Readout	Scale set to gross or net readouts
Controls	Conveniently placed for single operator use
Precision	Each weighment is checked and corrected automatically
Popular Options	Stainless Steel Construction, No bag / No Dump Switch, Small Bag Adapter

MEMBER PMMI USA

©2003 Magnum Systems, Inc. All rights reserved. Catalog number: MS.1012.1203

taylor products
Division of Magnum Systems

www.magnumsystems.com
Toll Free 888.882.9567 Phone 620.421.5550 Fax 620.421.5531
2205 Jothi Avenue, Parsons, Kansas 67357-8460